Art No	Description
88888-XXXX	SP - Ystad Dining Table - screw set
88888-XXXX	SP - Ystad Dining Table - Plastic Feet

furniture/fashion
Design by Daniel Johansson & Laila Bagge

VENTURE DESIGN
HOME & INTERIOR

15017-880/15017-888

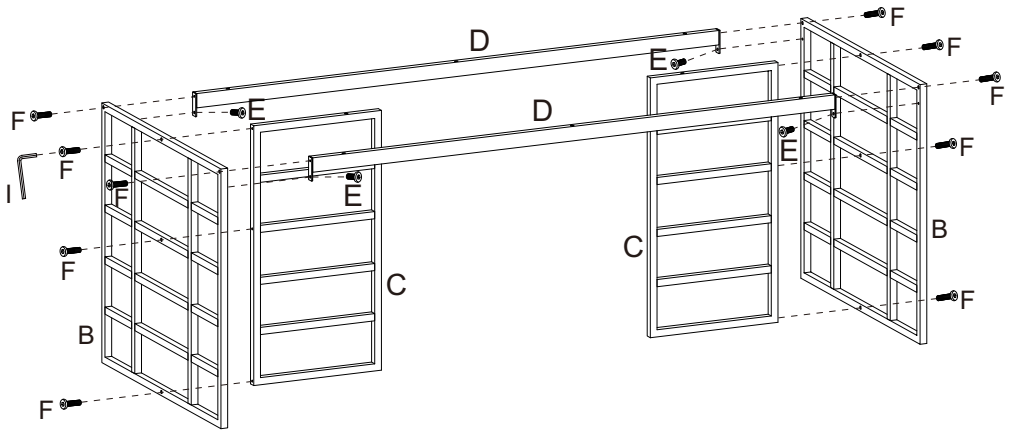

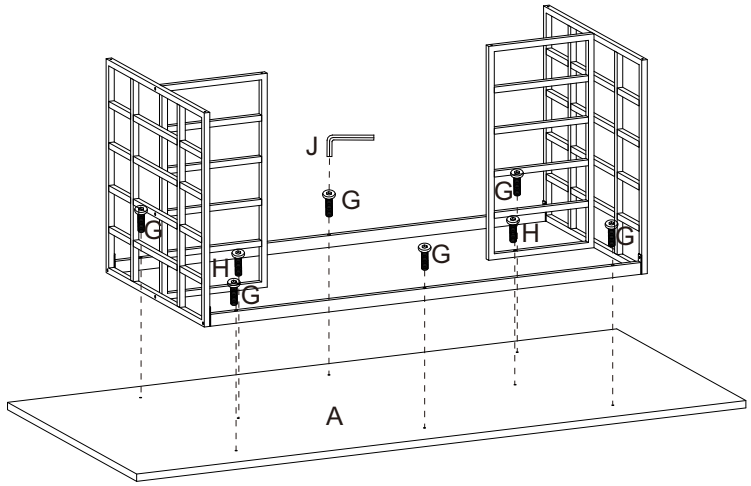

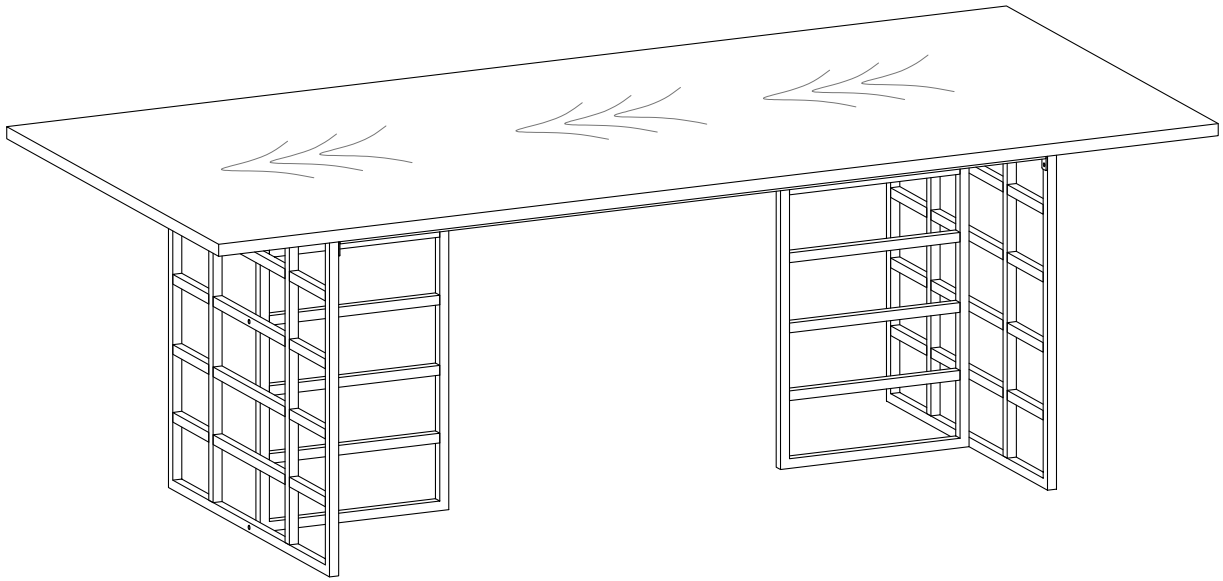

A		1	
B		2	
C		2	
D		2	
E		4	88888-XXXX
F		10	88888-XXXX
G		6	88888-XXXX
H		2	88888-XXXX
I		1	88888-XXXX
J		1	88888-XXXX