Art No	Description
88888-1021	Sp - Kivik sofa Table - Screw set
88888-1022	Sp - Kivik sofa Table - Plastic Feet
88888-1023	Sp - Kivik sofa Table - Glass Top

furniture/fashion
Design by Daniel Johansson & Laila Bagge

VENTURE DESIGN
HOME & INTERIOR

15014-568

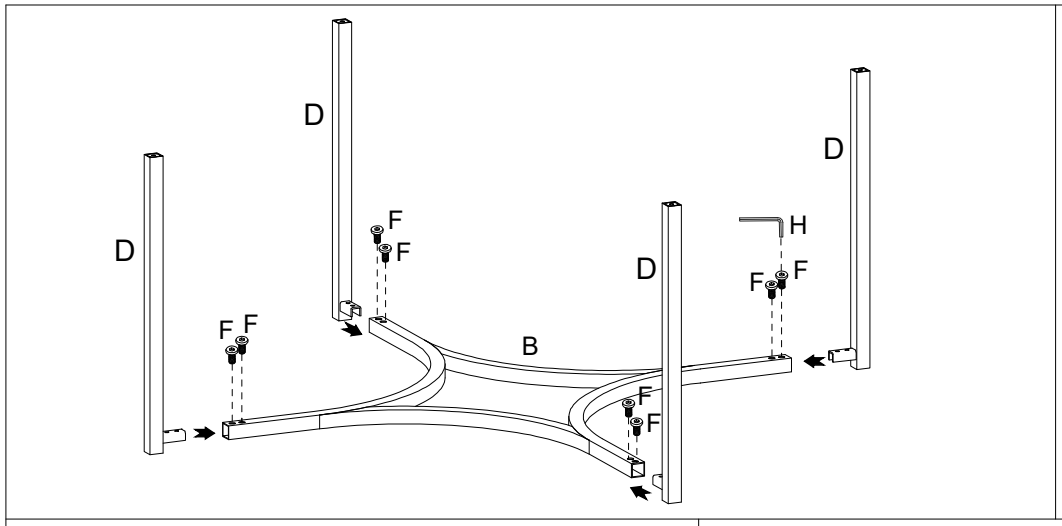

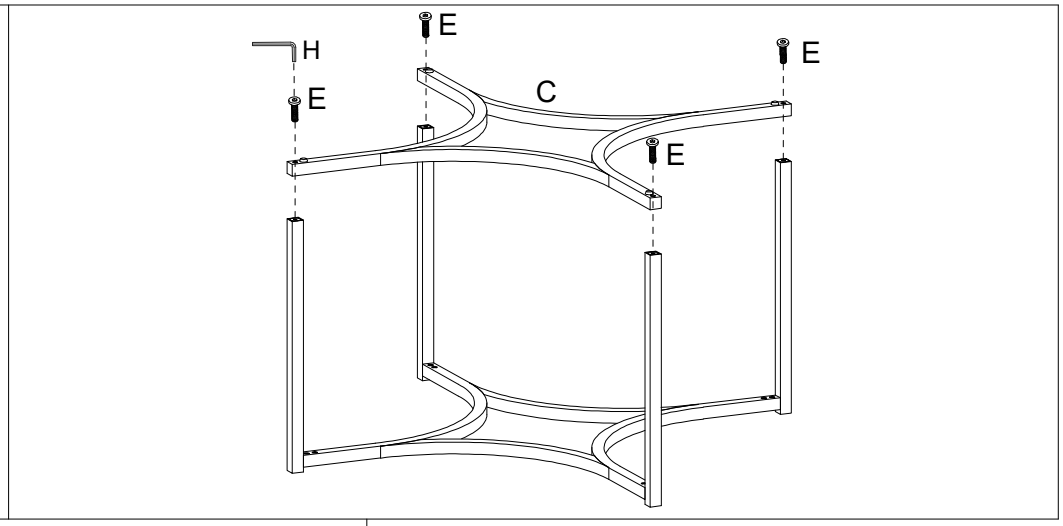

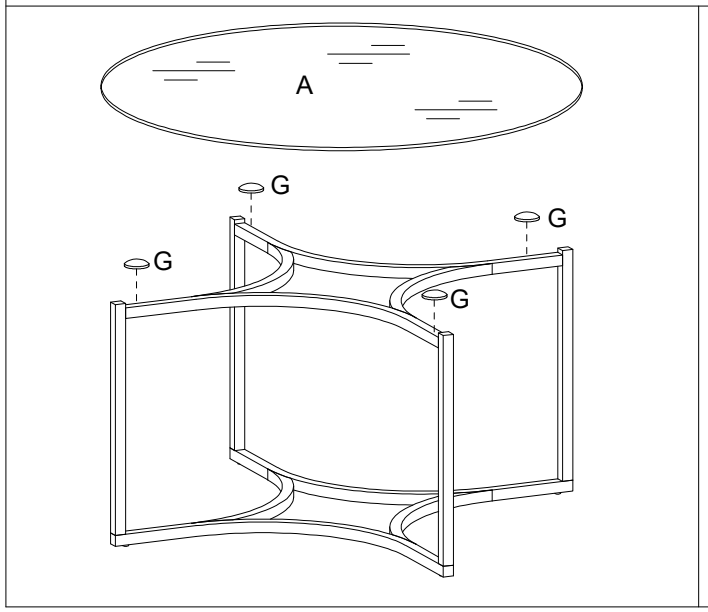

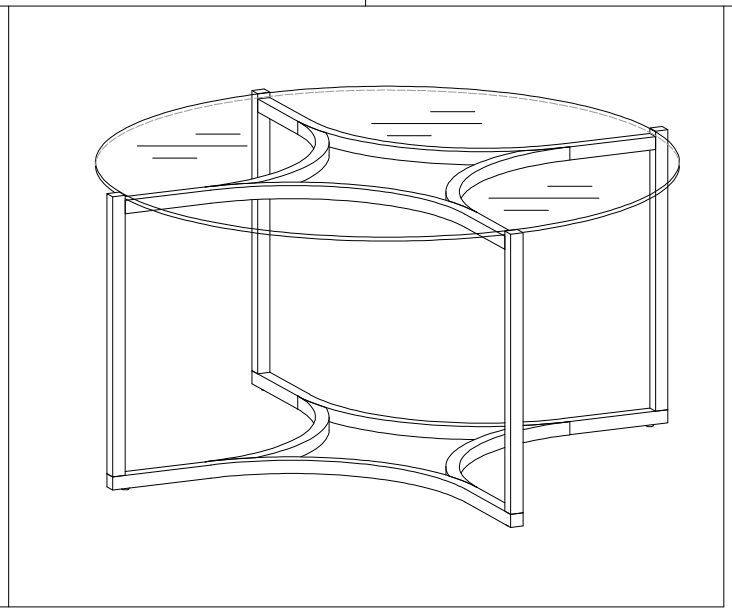

A		1	88888-1023
B		1	
C		1	
D		4	
E		4	88888-1021
F		8	88888-1021 88888-1021
G		4	88888-1021
H		1	88888-1021