Art No	Description
88888-281	SP- Dipp Square Bedside table-Screw Set

VENTURE DESIGN
HOME & INTERIOR

18041-458

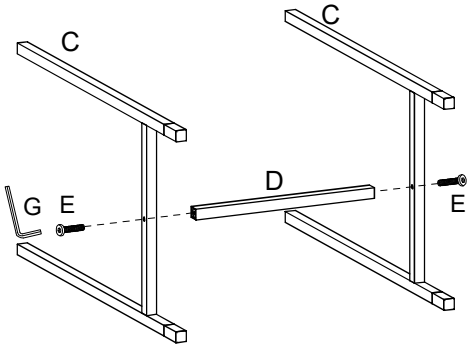

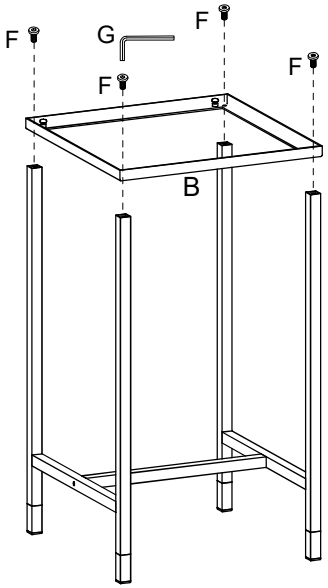

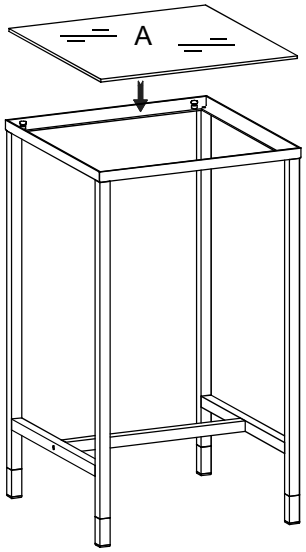

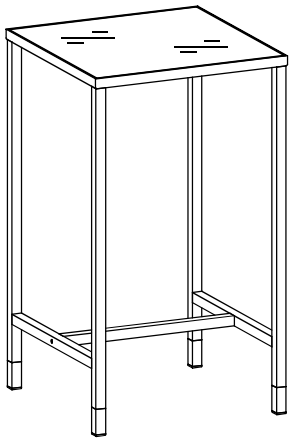

A	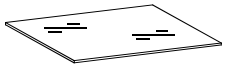	1	
B	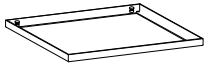	1	
C		2	
D		1	
E		2	88888-281
F		4	88888-281
G		1	88888-281